Revision number: 6

Purchasing Agent: David Gill
Phone: (801) 538-3254
Email: dgill@utah.gov

Item: LABOR & MATERIAL TO EQUIP TANDEM AXLE TRUCKS WITH 14-FOOT DUMP BODY, HITCH PLATE, TOOL BOX, TARPING SYSTEM AND CENTRAL HYDRAULIC SYSTEM.

Vendor:	23228JA	Tesco/Williamsen P.O. Box 26864 Salt Lake City, UT 84126-0864
Internet Homepage:		www.tescowilliamsen.com
Contact:		Clark Nielsen (cell) 801-631-5294
Telephone:		(801) 973-9400
Fax number:		(801) 973-2838
Email address:		Sales@tescowilliamsen.com
Usage Report Contact:		Susan Mead
Email address:		susan.mead@yahoo.com
Telephone:		(801) 973-9400
Fax number:		(801) 973-2838
Reporting Type:		Line Item
Brand/trade name:		Williamsen
Price:		See Pricing Summary
Terms:		Net 30
Effective dates:		06/21/05 through 06/20/09
Remaining renewal options:		None
Days required for delivery:		30-60 days after receipt of order
Price guarantee period:		To 06/20/09
Minimum order:		None
Min shipment without charges:		No Charges in Salt Lake area
Other conditions:		Potentially renewable through June 20, 2009

Revision #6: Price guarantee period extended to 6/20/2009

Bid # GL5074

This contract covers only those items listed in the price schedule. It is the responsibility of the agency to ensure that other items purchased are invoiced separately. State agencies will place orders directly with the vendor creating a DO in Finet. Agencies will return to the vendor any invoice which reflects incorrect pricing.

FINET COMMODITY CODE(S): For Agency use only
06530000000 - Dump Bodies-Hoists - Subframes

PRICING SUMMARY

DUMP BODY WITH HYDRAULICS

Unit price as specified $ 20,713.00 / unit

Option 1: ADD for increased body length, includes larger hoist and tarp:

15' Stainless steel dump body $ 436.00 / unit

16' Stainless steel dump body $ 1,374.00 / unit

17' Stainless steel dump body $ 1,914.00 / unit

Option 2: ADD for stainless steel upper and lower tailgate hardware in lieu of mild steel: $ 184.00 / unit

Option 3: DEDUCT for mild steel in lieu of stainless steel:

14' dump body $ 1,720.00 / unit

15' dump body $ 1,820.00 / unit

16' dump body $ 1,860.00 / unit

17' dump body $ 1,960.00 / unit

Option 4: ADD Force America Hydraulic System. $ 9885.00 / unit

Option price for one extra hydraulic valve. $ 334.00 ea

Percent of discount off list price. 37%

Option 5: ADD Commandall Controller $ 13,400.00 / unit

Percent of discount off list price. 37%

Option 6: ADD Rexroth A10VO100Hydraulic system. $ 12,183.00 / unit

Option price for one extra hydraulic valve. $ 1,206.00 ea

Option 7: ADD Parker Iqan Hydraulic System $ 13,606.00 / unit

Option price for one extra hydraulic valve. $ 580.00 ea

Percent of discount off list price 29%

Option 8: ADD 35 gallon (min) Hydraulic tank. $ 296.00 / unit

Additions due to '07 Emissions Requirements

Addition 1

Tank, Hydraulic, aluminum, upright, spring-mounted behind cab	$583.00

Addition 2

Prototype for each chassis make One-time charge each time a different make is ordered, but only on the first one.	$1,464.00

Addition 3

Prototype for each chassis model One-time charge each time a different model is ordered, but only on the first one.	$360.00

UTAH DEPARTMENT OF TRANSPORTATION
Equipment Operations
Steve McCarthy - Equipment Operations Manager

Two year State Contract with two one-year renewal options for Fourteen (14) foot Dump Body & Hydraulics. Multiple Contracts may be awarded as a result of this bid.

PART I: GENERAL CLAUSES AND CONDITIONS

1. The equipment furnished under this specification shall be the latest improved model in current production, as offered to commercial trade, and shall be of quality workmanship and material. The supplier represents that all equipment offered under this specification is new at time of delivery. DISCONTINUED, DEMONSTRATOR OR DEVELOPMENTAL MODELS ARE NOT ACCEPTABLE.

2. **Supplier shall submit, with the bid, in duplicate, the latest detailed specifications for the offered equipment.** Supplier should submit the latest literature, duplicate, for informational purposes only.

3. The units shall be completely assembled and adjusted. All equipment, including standard and supplemental equipment, shall be installed, and the units shall be serviced and ready for continuous operation, including all fluids levels, fuel, oil etc. To be completely detailed when delivered.

4. All parts not specifically mentioned, but are necessary for the units to be complete for operation, or which are normally furnished as standard equipment, shall be furnished by the supplier. All parts shall conform in strength, quality and workmanship to the accepted standards of the industry.

5. The units provided shall meet or exceed all Federal and State of Utah safety, health, lighting and noise regulations and standards in effect, and which are applicable to equipment furnished, at the time of acceptance.

6. It is the intent of STATE to purchase goods, equipment and services having the least adverse environmental impact, within the constraints of statutory purchasing requirements, departmental need, availability, and sound economical considerations. Suggested changes and environmental enhancements for possible inclusion in future revisions of this specification are encouraged.

7. STATE encourages all manufacturers to comply, voluntarily, with the Society of Automotive Engineers (SAE) recommended practices.

8. Measurements will be given in the English system.

9. All inquiries regarding this bid must be submitted, by fax (801- 965-4818) or email (prottmann@utah.gov) to Paul Rottmann, UDOT Purchasing Agent, not later than five business days prior to the bid date. Addenda will be issued to all known bidders and posted on the Utah State Purchasing website, www.purchasing@utah.gov. **Exceptions shall not be granted to requests made after this deadline.**

10. Failure to provide and comply with Part I of bidder submitted specifications will result in bid(s) being declared non-responsive.

11. Successful bidder to include provisions for pre-build conference at UDOT headquarters (4501 So 4501 W S.L.C, Utah 84119) Pre-delivery inspection for two (2) personel at factory, when unit is 90 percent complete.

12. **NO QUANITY ESTIMATES ARE AVAILABLE AND NO QUANTITY IS GUARANTEED AS A RESULT OF AWARD TO THIS INVITITION FOR BID.**

Bid response: Bidder name_____

Make and Model quoted_____

PART II: **GENERAL SPECIFICATIONS**

1. SCOPE:
   The intent of this bid is to define the minimum acceptable standards for a 14- foot dump body, hitch plate, tool box, tarping system, all components for central hydraulic system, that will be used to haul processed materials, rocks, debris, earth etc. for maintenance work both on and off highway.

2. Warranty:
   Bid to the state terms of warranty. All warranty periods shall start after auxiliary equipment has been installed and trucks are put into service. Basic warranty shall include agreement to allow all UDOT shops to be approved, to complete "In-house" warranty repairs, in UDOT shops. The warranty shall include parts, labor reimbursement and repetitive problems, reasonable towing and road travel cost reimbursement.

   Bid response *Comply*_____*Exceptions*_____

   Bid response *Basic Warranty period*_____

   Hydraulic system warranty period. _____

   Tarp warranty period _____
   (Roll-ride tarp electric)
   (Model RR640-3 system.)

   Tool box warranty period. _____

   Paint warranty period. _____
   (minimum 18 months).

   *Other warranty period*_____
   (Attach copy if needed.)

   Other_____

3. NOTICE TO BIDDERS:
   Any example shown is listed to show type and class of equipment desired. Bidders are cautioned to read the specifications carefully, as there may be special requirements not commonly offered by the equipment manufacturer. Do not assume your standard equipment meets all detailed specifications merely because it is listed as an example. Bidders are cautioned that units delivered to the FOB points, which do not meet specifications in every aspect will be rejected.

PART III, DETAILED SPECIFICATIONS

1. Dimensions:
   Length 14'
   Width 84"inside x 96" wide outside.
   Side height 44"
   Tailgate height 44 "

2. Front End:
   62" high 10 ga. 304-2B stainless steel construction with a fully enclosed top rail, integral tarp housing and two formed horizontal stifferners.

3. Cylinder Housing:

Hydraulic cylinder to be mounted out front of body (no protrusion into the load area). Vertical lift assembly and the tapered cylinder mount to be ¼" 304-2B stainless steel one piece, open to the front to extend upward to the top of the head board and to provide support for the front end.

4. **Sides:**
44" high exterior construction to be one-piece design, 10 ga 304-2B stainless steel with a 3" x 5" double sloping top rail, one integrally formed horizontal, side stiffener 8" high x 3" deep. Sloping bottom rail 8" x 6" and lapped under floor with a fully welded seam. No exterior horizontal welded seams, The interior of the sides to be one piece, 1/8" A570 steel with 50,000 lb. yield and 65,000 lb. tensile strength. Fully welded perimeter. To include two ratched type binders with nylon straps to tie down sander. Location to be discussed at paper pilot review.

5. **Corner Posts:**
44" high rear corner posts 6" wide with recess for upper tailgate hinges, 10 ga. 304 stainless steel exterior (front, side and back). Inside (rear) of corner post 1/8" 450 BHN 175,000 psi yield and 200,000 psi tensile strength steel. Two keyhole tailgate chain catches in each corner posts with ¼" stainless steel interior backing plate.

6. **Tailgate:**
44" high, sloping forward 18 degrees, double wall design, interior face 1/8" 450 BHN 175,000 psi yield tensile strength steel and the exterior 10 ga. 304 stainless steel. The exterior panel will have formed into it at top, bottom and two intermediate, sloping horizontal braces, no exterior horizontal welded seams. Vertical end braces shall be 3" x 3" x ¼" square stainless steel tubing capped on both ends, Steel upper hinges are to be recessed into the upper corner posts, and not to extend above the top of the corner post. The hinges shall be ¾" flame cut hi-tensile steel with 1-1/4" hinge pins thru greaseless bushings. Pins to be quick release type with spring detented locking pins. Lower shaft 1-1/4" solid steel. Independently adjustable, 5/8" flame cut hi-tensile steel over-lock hardware and cradle (cast not acceptable) with ¼" backing plate on the back of the corner post. Tailgate locked by over center hardware at the rear of the body with spring type air cylinder (air to open, spring to close, over center to lock). Heavy duty "D" ring centered at the top in the interior. 3/8" combination drop and spreader chains with protective covers (shipped loose). Gate and body to be stamped with matching numbers on upper right at rear corner and at least 3/8" high. Body and matching tailgate to be delivered together.

7. **Floor:**
¼" thick, 400 BHN 180/220,000 psi steel, with radius side formed floor to side. One piece (no seams).

8. **Understructure:**
Longitudinal design, (cross-memberless) for a smooth understructure. 10" high x 4" deep x ¼" wall 50,000 psi yield rectangle tubing, fully welded to the floor. Full depth sloping (asphalt) rear cross-member ¼" 304 stainless steel with reinforced cutout for direct access to the hydraulic connectors on the rear hinge assembly. Rubber cushion strips 3/8" thick, vulcanized, and attached to the bottom of the steel tubing.

9. **Lights:**
Two (2) sets of LED 4" diameter combination stop, turn and taillights recessed in the rear corner posts. Backup lights 4" diameter recessed into the rear corner posts below the combination lights. LED 2-1/2" diameter side and rear marker lights recessed into the rear corner post. LED 2-1/2" diameter ICC cluster in mounting bracket and attached to the rear hinge assembly. All lights mounted in rubber grommets. License plate light and mounting plate on buck plate. Side and rear reflectors to be 3M/PM490 stick on type. All lights and markers to meet federal and state regulations for height and placement.

10. **Wiring:**
Wiring shall run from Truck-lite junction box in hydraulic box. All wiring to be sized for twice the design circuit current. All wiring to be pre-fabricated sealed wire loom with no splices. All connections to have a corrosion preventive compound (Truck Lite NYK-77 or equal) including junction box. Wiring to be secured every 12 inches to body so no loops hang down. All wire to be one piece, no splices, with connections only in junction box.

11. **Steps:**

One drivers side front corner on the outside rail 12” long stainless steel grip strut with 24” long stainless steel grab handle on the cab protector outside vertical gusset and attached with stainless steel fasteners.

12. Cab Protector:
20” long x 74” wide10 ga 304-2B stainless steel. Flanged side gussets to extend down a minimum of 24” on each side to support the cab protector and light bar. Shelf out front of cab protector 48” wide x 11” long for light bar. UDOT to furnish light bar.

13. Welding Specifications:
All stainless steel shall be 304 with #2B finish.
Welding stainless to stainless
Mig 308 LSI, ER 308SI / ER 308LSI

Welding stainless to 450 BHN steel
Mig 309 LSI ? ER 309SI / ER 309 LSI
FCP S309/309L ER309 / ER 309L

Welding 450 BHN steel to A570 steel
Outer shield 71M E71T-9 E71T-1

ALL WELDS INTERIOR AND EXTERIOR ARE TO BE CONTINIOUS, NO STITCH WELDING PERMITTED.

14. Hoist:
Single cylinder base lift trunnion mount, out of the body**. 30** Ton capacity.

Cylinder:
_____” diameter 1st moving stage,_____ stages with _____” stroke

Cylinder Attachment
The bottom cylinder pin is a 2” diameter cold rolled steel shaft that pivots on two 1” flamed cut pin bearings, the pin is held in place by two 3/8” bolts. The bearings are welded to a 5” x 5” x ½” square tubing cross-member that is welded to 3” x 5” x ½” angles that are over the top and down the outside of the truck frame. The angles are bolted to the truck by three ½” grade 8 bolts. The bolts shall have grade 8 flat washers on both sides and a grade 8 lock nut (nylon lock not acceptable). The threads are to be to the outside and torqued to 90 ft. lbs .for ½” or 185 ft. lbs. for 5/8”.

The cylinder attaches to the body through a cover sleeve. The circular steel outer sleeve is secured to the top of the cylinder by a single 1-1/2” threaded stud. The lower attachment is by two “lift straps” that are bolted to the body vertical lift assembly with six 5/8” grade 8 bolts each side and tightened as per procedure noted above. Lift strap pivot points utilize greaseless phoenlic bushings.

15. Body Guides:
Truck frame mounted forward third of the body. The guides will be 3/8” thick x 5” wide and attached to the truck frame by three ½” grade 8 bolts.

16. Safety Prop:
A tubular safety prop constructed of 2-1/4” pipe. The pivot end of the prop shall be welded to the outside of the driver side longitudinal and to pivot downward into a prop pocket. The pipe is held in the stowed position by spring-loaded catch.

17. Mud Flaps:
To have proflex rubber 3/8” minimum mud flaps behind rear tandems. To have steel reinforcement plate on both sides of the bottom, with hook welded to bed for hanging of mud flap. U.D.O.T logo required.

18. Rear Hinge:

Rear Hinge to be platform design and heavy duty for maximum life, 4 x 4 x ½" angled or ½" formed plate for stability and ease of maintenance. To be welded to the truck frame, hitch plate and side plates. Rear hinge pins to be minimum 2-3/8" diameter. Rear hinge is to be blocked with 5" min. width. Designed for maximum bearing surface with bearings to be a minimum 1-1/4" width to reduce wear. Grease-less hinge assembly pivot points utilize grease-less phoenlic bushings. And completely re-buildable. All other connections to the truck frame are to be bolted. There is to be no other welding to the frame. All bolt holes are to be in the web of the frame. There are to be no holes drilled in the flange of the frame.

19. Mounting: Location of the rear hinge assembly to provide 20 inches overhang. Angle iron sub-frame not acceptable.

20. Rear Hitch:

The Hitch plate are to be manufactured and installed as shown on UDOT reference drawing at the end of specifications.

The sides plates to be cut from ½" plate to the size and shape shown. The plate is to be braced and supported as shown with 4 x 4 x ¼" square tube and plate braces.

21. Chip Box Bar:

The chip box hitch bar is to be 1-1/2" round bar welded into the 4 x 4 tubes. Length of the tubes to be adjusted so that the center of the bar is 14 inches above ground with no load. There must be 10 inch clearance between the chip box bar and the rear differential housing of the truck.

22. Connections:

Couplers for the hydraulic front mount snowplow to be mounted to a manifold plate using bulkhead connectors. Manifold to be located at the curbside front frame extension and temporarily attached (UDOT to do final installation). Couplers as specified in the hose section and to include dust covers.

Sander hydraulic and electric couplers to be located at the rear as per the attached drawings and to include hydraulic couplers as specified in the hose section with dust covers and pre-wet sander electrical connector to be BOB-Tail Products 6TR17 with wires run to the central hydraulic enclosure (no splices).

Trailer hydraulic line, glad hands and electrical connector to be mounted on a plate welded to the top of hitch plate located for as per attached drawing. Trailer electrical to be Pollak 11-721 socket. Pup trailer electric tarp connector to be BEE 20-46 dual pole. All connectors to have dust caps. See attached drawing for locations and color codes.

23. Pintle Hitch:

The pintle hook is to be Premier model 2300A with air cylinder. The pintle is to be bolted to the main plate in the location shown so that the top of the hook is to be 28 inches above ground with no load. There is to be a protective flap over the pintle made from rubber belting.

24. Tow Hooks: To have two bolt on rear tow hooks, 25000 lbs. minimum each, mounted on each side of rear hinge.

25. Tool Box: Heavy-duty stainless steel approximately 18" x 18" x 18", shall be frame mounted on the curbside behind cab. Toolbox door shall be hinged at the bottom and have stop chains to form a shelf when opened. Door shall have key lock latch and form an interlocking closure with automotive style bulb rubber seal. Interior bottom of the box to be covered with Dri-deck pad.

26. Tarp: Roll-Rite model RR640-3 electric system including aluminum tarp bow and tension bow, 4 spring ext. pivots, and asphalt resistant tarp.

27. Paint:

All items to have a minimum warranty 18 months.

All mild steel surfaces shall be acid washed and dried prior to priming. If rusted, metal must be sand blasted. All auxiliary items like hydraulic control boxes, tool boxes, etc must be painted before installation. To have one coat of

DuPont Jet Seal or Quick Seal Primer. Painted surface to be painted to provide a minimum paint thickness of 4 mils. To be verified at time of delivery.

Its is the vendors responsibility to match cab paint. No hydraulic hoses, fittings, filters or electrical connections shall be painted. Painting of areas where fittings or electrical connections are placed, shall be done prior to installation.

The powder coating process of shot blasting, alkaline cleaner, iron phosphate wash, drying all parts, electrostatic/pnrumatic- powder feed painting and curing is the preferred painting method. Dealers advertising to be omitted.

28. Hydraulics: See Exhibits A through D for detailed descriptions of the four (4) acceptable brands of hydraulic systems.

NOTE THE FOLLOWING INFORMATION CONCERNING HYDRAULIC HOSES AND SIZES AS WELL AS HYDRAULIC COUPLINGS, MALE AND FEMALE SHALL BE INCORPERATED IN ALL OF THE FOLLOWING HYDRAULIC SPECIFICATIONS:

The proportional controls shall be protected by individual quick blown fuses. The lighting shall be on a separate circuit with appropriate size wire and circuit breaker.

The console shall be mounted on a 2 inch square column with 12 x 12 floor plate and two braces. (Location and design to be determined at pilot review.)

The system is to include built in ground speed simulator and be designed for calibration without special tools. The system to be designed to prevent interruption of spreader conveyor and spinner operation when plow hoist or angle functions are operated. System must provide priority plow lift and plow angle at all engine speeds including idle.

All hydraulic lines and fittings to be hydraulic type. Standard pipe fittings are not acceptable. Hose fittings shall be JIC 37 degree, crimped type. All hoses shall be bundled with heavy ties spaced at 12 inches, where possible, and clamped and supported with padded hose clamps at 3 ft. intervals to prevent sagging and chaffing. Hose shall be the following minimum size and shall meet or exceed SAE standards. To be Parker 431 type or equal.

Each hose assembly shall be numbered and have a metal band tagged at each end with the hose assemble number.

Pump suction line- No 24, SAE 100R4
Pump Pressure line to valve bank- No 16, SAE 100R2
Conveyor pressure line to rear of frame- No 12, SAE 100R2
Conveyor line to have Parker FC-752-12FP coupler with dust cap.
Spinner pressure line to rear of frame- No 8, SAE 100R1
Spinner line to have Parker FC-751-12FP coupler with dust cap.
Spinner and conveyor common return from rear of frame- No 16, SAE 100R1 with Parker FC-1002-16FP coupler with dust cap.
Bed hoist line to be No 16SAE 100R 2
Filter return line to be No 20 SAE 100R1

Trailer dump line to rear of frame No 16, SAE 100R2 with Parker FC-1001-16FP coupler with dust caps.
Plow hoist and angle lines- No 8, SAE 100R2 to be run to a manifold mounted behind and below front bumper on right side.
Plow angle right line to have Parker FC-502-8FP coupler, angle left line to have Parker FC-501-8FP coupler and plow lift to have Parker FC-501-8FP coupler.
Lift line to have Parker FC-502-8Fp coupler on one end and 90 degree fitting at the cylinder end.
All quick couplers to have dust caps.

<u>OIL</u> **The system will have reservoir filled to operating level with Chevron Tractor Hydraulic Fluid, CPS#226606, or approved equal.**

<u>Testing</u> **The complete system is to be tested for leaks, for proper operation and calibrated before delivery. A Representative of the State of Utah D.O.T. is to observe a test of the first unit before delivery.**

Delivery must also include one set of parts lists and shop (repair) manuals for each unit delivered, plus an Additional 10 Manuals for U.D.O.T. Shops. CD are acceptable.
These manuals Must include the following information:

- **A list of mechanical parts.**
- **A list of electrical parts including lights, with manufacturer and part number.**
- **An electrical circuit diagram.**
- **A list of hydraulic components (pump, valves, filters) giving manufacturer, and part number.**
- **A hydraulic circuit description describing the function of the system.**
- **A hydraulic schematic circuit diagram using standard component symbols.**
- **A hydraulic circuit diagram using component pictorials and giving hose assembly numbers.**
- **A list of hydraulic hose assemblies giving hose type, assembly length, fittings and connection points.**
- **A trouble shooting guide.**
- **Adjustment and calibration procedure.**
- **A copy of operators manual.**

PART IV: PRICING

1. Unit price as specified: $_____ / unit

2. OPTION 1: ADD for Increased body length, includes larger hoist and tarp:

15' Stainless steel dump body $_____/unit

16' Stainless steel dump body $_____/unit

17' Stainless steel dump body $_____/unit

3. OPTION 2: ADD for Stainless Steel upper and lower tailgate hardware in lieu of mild steel:

$_____/unit

4. OPTION 3: DEDUCT for Mild Steel in lieu of Stainless Steel

Body constructed of 10 ga. A570 steel with 50,000 lb. yield in lieu of 10 ga. 304 Stainless Steel. Painted to match the truck cab.

DEDUCT

14 ‘ Body **$1,328.00/unit**

15’ Body **$1,408.00/unit**

16’ Body **$1,439.00/unit**

17’ Body **$1,519.00/unit**

5. OPTION 4: ADD; FORCE AMERICA HYDRAULIC SYSTEM (Exhibit A) $9,885.00/unit

5.1 *Make and Mode:* Force America-Model FA-ASS-LS-AIR

5.2 *Option Price for One Extra Hydraulic Valve for additional equipment:* $334.00

5.2 *Warranty period:* 3 Years

5.3 *SHOW PERCENT OF DISCOUNT OFF OF LIST PRICE % FOR UNIT AND FUTURE PARTS* *37%*

NOTE: The bid will be awarded based on the lowest responsible bidder that meets the specifications with the option listed above. The successful bidder can modify the chassis to meet the needs of city and government agencies based on percentage of discount off list prices. Please provide pricing and catalog data.

6. OPTION 5: ADD; COMMANDALL CONTROLLER (Exhibit B) $13,400.00/unit

6.1 *Warranty Period:* 3 Years

6.2 *SHOW PERCENT OF DISCOUNT OFF OF LIST PRICE % FOR UNIT AND FUTURE PARTS* 37%

NOTE: The bid will be awarded based on the lowest responsible bidder that meets the specifications with the option listed above. The successful bidder can modify the chassis to meet the needs of city and government agencies based on percentage of discount off list prices. Please provide pricing and catalog data.

7. OPTION 6: ADD; REXROTH A10V0100 HYDRAULIC SYSTEM (Exhibit C) $12,183.00/unit

7.1 *Make and Model:* Certified Power

7.2 *Option Price for One Extra Hydraulic Valve for additional equipment* $1,206.00

7.3 *Warranty Period:* See Attached

7.4 *SHOW PERCENT OF DISCOUNT OFF OF LIST PRICE % FOR UNIT AND*

FUTURE PARTS Not Available

NOTE: The bid will be awarded based on the lowest responsible bidder that meets the specifications with the option listed above. The successful bidder can modify the chassis to meet the needs of city and government agencies based on percentage of discount off list prices. Please provide pricing and catalog data.

8. OPTION 7: ADD; PARKER IQAN HYDRAULIC SYSTEM (Exhibit D) $13,606.00/unit

8.1 *Make and Model*: Parker IQAN

8.2 *Option Price for One Extra Hydraulic Valve for additional equipment:* $580.00

8.3 *Warranty Period:* 2 years/Parker Filter as specified

8.4 *SHOW PERCENT OF DISCOUNT OFF OF LIST PRICE % FOR UNIT AND FUTURE PARTS* 29%

NOTE: The bid will be awarded based on the lowest responsible bidder that meets the specifications with the option listed above. The successful bidder can modify the chassis to meet the needs of city and government agencies based on percentage of discount off list prices. Please provide pricing and catalog data.

9. OPTION 8: ADD A 35 GALLON (MIN) HYDRAULIC TANK $296.00/unit

PART IV: PARTS AND SERVICE

Bidder shall list source(s) of parts and service of the purposed equipment. The Contractor must have a Parts and Service Center located in the Salt Lake City, Utah area. Consideration will not be given to bidders unable to satisfy the Utah Department of Transportation or the Division of Purchasing as to the adequacy of their service facilities and the availability of replacement parts.

PART V: DELIVERY, PILOT REVIEW, LIQUATED DAMAGES, DOCUMENTATION, ACCEPTANCE AND PAYMENT

1. **DELIVERY REQUIREMENTS**

1.1 Each year when UDOT places and order, the pilot model is to be available for inspection with-in 25 days after receipt of first chassis (for 2005 the date will be approximately August 20th). Thereafter, two trucks per week, minimum, shall be completed after the pilot is accepted. At UDOT's option, an extension may be granted, whichever is in UDOT's best interest.

1.2 Unless a delivery extension is granted for acceptable reasons due to circumstances beyond the vendor's control, liquidated damages of $50.00 per truck will be deducted from the invoice for every working day after the expiration of the number of days shown on the purchase order until the unit(s) are delivered. This provision is not intended as a penalty but as liquidated damages.

1.2 Delivery shall be at no additional charge in the Salt Lake City area. For UDOT, the delivery address is: Equipment Operations 4501 South 2700 West in Salt Lake City, Utah 84119.

2. **TRAINING**

2.1 INSTRUCTION ON SAFETY, OPERATION AND MAINTENANCE: The vendor shall provide the services of a competent, factory-trained, technician thoroughly trained in the use and operation of the units offered to STATE.

2.2 Vendor shall provide instruction on safety, operation and preventive maintenance of the units, after the units have been delivered and is ready for operation but prior to payment. The instruction shall include a full demonstration of all the unit(s) functions on the unit(s) delivered. Instruction shall identify potentially hazardous situations when working.

2.3 LESSON PLAN: The supplier shall furnish a copy of the manufacturer’s approved lesson plan for the instructional training within 30 days after award of the purchase order. The lesson plan may be taken from the operator’s manual, provided all necessary information is included.

3. **DOCUMENTATION**

3.1 Delivery must include Supplier's Invoice, a Copy of Warranty(s) and an Operator’s Manual for each unit.

3.2 Operators Manual shall include start up procedure, check list for data collection, shut down procedure.

3.3 For UDOT, delivery must also include ten (10) complete sets of parts lists, and ten (10) sets of shop (repair) manuals at no additional charge. CD's are acceptable for shop repair manuals.

4. **ACCEPTANCE**

4.1 All equipment ordered with this request will be subject to acceptance inspection and performance testing upon receipt.

4.2 Acceptance inspection and performance testing will not take more than five working days, weather permitting.

4.3 The vendor will be notified within this time frame of any units that do not comply with the purchase order specifications.

4.4 If any units are canceled for non-acceptance, the needed equipment may be purchased elsewhere and the vendor may be charged full increase, if any, in cost and handling.

5. PAYMENT

Invoices will not be approved for payment until all of the required spare parts, filters, documentation and manuals have been received and the equipment has been accepted.

EXHIBIT A
FORCE AMERICA HYDRAULIC SYSTEM

HYDRAULIC PUMP:

The hydraulic pump shall be a U.S. manufactured axial piston pressure and flow compensated load-sensing type. The pump shall be cast iron construction and rated to 4.00 cubic inches per revolution at maximum stroke which will deliver 16.4 GPM @ 1000 engine rpm. The pump shall have a 2" inch suction line and ½" control drain line plumbed directly back to the reservoir. The pump shall be rated for 3600 PSI maximum and 3000 PSI continuous. The pump shall have a 1¼" keyed drive shaft and SAE type C mounting flange. The pump will be supplied by a 2" 90 degree split flange suction hose and have a #16 male JIC adapter fitting for the pressure line. No suction hose barbs will be acceptable. The pump shall be a Force America PAVC65-L with revised outboard bearing and snap ring design. A 1" high-pressure steel ball valve, tie wrapped in the full open position, shall be installed at the outlet of the pump to allow pump shut-off in the event of hose break or low level indicator light/buzzer alert. This allows the operator to safely return the equipment to a location where system repairs can be made without damaging the pump.

PUMP MOUNTING:

The hydraulic pump shall be mounted with shaft centerline parallel to the crankshaft centerline and at a level to create not more than a **three-degree angle** on the driveline. Pump mounting shall be incorporated with a bracket fabricated to mount in the extended frame rails of the truck.

DRIVE LINE:

The hydraulic pump shall be driven directly off the engine crankshaft via a splined driveline to allow for movement. The driveline shall include grease fittings on both u-joints. Driveline shall be a Spicer model 1310 series.

CONTROL VALVE:

Control valve shall be U.S. manufactured. Valve shall be a load sensing type with o-ring ports. Mid-inlet section porting will be #16 inlet, #20 outlet, #16 hoist section, #4 load sense port, and #10 or #12 for all other sections. The hoist section shall be stacked to one side of the mid-inlet and all other sections will be stacked on the other side. All ports shall be level with each other so as to lay flat on its base. There will be a main relief in the mid-inlet section that will be set at 2300 psi to protect the system from being over pressurized.

Valve sections to be arranged as follows:

First section:
Shall be air operated spring centered single or double acting based on hoist manufacturer's requirements. To be forty (40) GPM rated and have a two hundred (200) PSI down relief to protect cylinder head (SAE #16 ports) if using double acting hoist. Pull to raise/push to lower.

Mid-inlet section:
Load sensing mid-inlet with 0-3000 PSI gauge installed for setting operating pressures. Ports to be SAE #16 pressure, #20 SAE return, and #4 SAE load sense.

Second section:
Twenty-five (25) GPM three-way with float function for plow raise and lower (SAE #10 ports). Pull to raise/push to lower.

Third section:
Twenty-five (25) GPM four-way for plow reverse (SAE #10 ports).

Fourth section:
A priority section shall be installed and used with plow raise/lower and any wing function to ensure prompt responses and will dedicate all available flows to these functions when required. It shall be located between the mid-inlet and other functions downstream that do not require this priority feature.

Fifth section:
Dual flow spreader valve section to control the Auger and Spinner independently via a 12V DC pulse width modulated signal. Section must be a mono-block design with two pressure compensated cartridges that are a single piece design with hardened cartridge bores and spools and capable of flows up to 14 GPM for auger and 7 GPM for spinner. The cartridges shall have a heavy duty 7/16-20 UNF screw style manual over-ride that are adjustable from no flow to full flow. Valve housing is to be made of aluminum with a gray anodizing for durability and resistance corrosion. Section to be Force America Spin-A-Veyer valve.

Valve shall be Force America Add-A-Stack valve with Spin-A-Veyer spreader section or prior approved equal.

HYDRAULIC VALVE ENCLOSURE:

The valve assembly shall be mounted in a weather-proof but not weather-tight enclosure. The valve enclosure shall be fabricated of 10 and 12 gauge steel. Enclosure shall be designed to not allow humidity to be trapped inside. Valve shall be mounted with all ports coming out the bottom and holes allowing for hose adapter fitting. All valve ports to be SAE o-ring with male JIC adapters. Valve will be "Boxed In" with water shedding designed steel cover and not the base. The cover shall be held to the enclosure by four heavy rubber latches. All plumbing shall be external, directly out the bottom of the valve enclosure. No hydraulic hoses shall be permitted inside the valve enclosure. Shall have brackets connecting on the back and side allowing for a bolt-on application to the frame. Location to be determined by Utah D.O.T. and the successful bidder.

IN CAB CONTROLS

Control center to include Vector Control Systems 910000 air controls for dump/pup-body up/down with mechanical lock and wing plow or plows up/down with spring detent to center. Model 910030 quad control valve for snowplow Up/down and left/right. All control handles to have lighted labels. Air toggle switch with guard and warning light for hydraulic diversion valve for dump to pup. Hydraulic oil level gauge, warning lights for hot oil, filter bypass and dump body up. Warning buzzers for hot oil and filter bypass. Installed in a steel, powder coated console with removable sides and top. Force America Sander controls to be attached to the top of the console. Control center to be on a raised RAM mount pedestal with adjustable arm and RAM-D-101 adjustable system.

RETURN LINE FILTER:

The return filter shall be equipped with an #20 SAE inlet and outlet with a 25 PSI by-pass and a Pressure Switch port tied to a light and buzzer to alert the Operator when filter is clogged. It shall also include a Visual colored gauge filter element condition indicator also. The element shall be a double length, double capacity style spin-on Force America model ****** or prior approved equal. One (1) additional Force America F5011-10C (LE-10 Zinga) model element shall be included with the delivery to Utah D.O.T. This model shall be compatible with many other manufacturers.

HIGH PRESSURE FILTER:

There shall be a high-pressure filter plumbed between the hydraulic pump and the control valve assembly. The hydraulic filter shall be a 25-micron absolute and rated for 6000 psi. The filter shall be model HP17125VG30EPUG5S2AE7050P or prior approved equal and be equipped with a visual and electrical bypass indicators. The electrical indicator shall be wired to a warning light in the heads up display.

SPREADER CONTROL:

The electronic spreader control shall be designed for precise Open Loop control of granular material and pre-wet application. The spreader control shall regulate the auger and spinner speeds as well as pre-wetting liquid. There shall be three individual detented knobs providing proportional control from closed to fully open on the control valve of the auger, spinner and liquid. Front face panel shall have "standby" indicator light activated by pushing the auger dial, blast mode adjustable for momentary or timed up to16 seconds with cancellation and flashing indicator light. Other features shall include remote standby and blast inputs, adjustable back lighting via vehicle controls. The unit must be protected from reverse polarity, as well as be over-voltage protected by using a five-amp reset circuit breaker. All circuit boards to be conformal coated. The unit must provide operational modes for manual or open loop (ground speed only). The

liquid control will have a separate power switch with indicator light. In addition the liquid unit will have an optional liquid blast as well as a low pressure, high pressure and low liquid warning indicators. The liquid control will operate hydraulic, electric, or gravity pre-wet systems. Spreader control shall be a Force America SSC-2500 or prior approved equal.

HYDRAULIC LINES AND PLUMBING:

All hydraulic lines and plumbing shall be of sufficient capacity so as not to create heat or turbulence within hydraulic system. Suction line between reservoir and pump shall be a minimum of 2 in. I.D. with a minimum SAE 100-R4 rating and shall be secured on both ends via heavy duty banding straps, radiator hose clamps unacceptable. All pressure hoses, including signal sense to pump shall have swivel fittings on both ends and have a minimum SAE 100-R2 rating. Return lines and case drain shall have minimum SAE 100-R1 rating.

Hydraulic lines shall be routed to minimize interference with equipment and chassis components requiring periodic servicing. Support brackets, grommets, and tie wraps shall be provided where appropriate to protect lines from damage by abrasion, cutting or impact.

Hoses shall not be routed near exhaust manifolds pipes, bolts, sharp edges, and exhaust system to prevent wear, fatigue, or fire. **Pipe fittings** shall not be used in any high-pressure line. Maximum distance between support clamps on all hydraulic lines shall be 24in.

HIGH PRESSURE FILTER

High pressure filter matching maximum hydraulic flow to be installed between the pump pressure port and valve inlet. It shall include a visual filter element condition indicator and an electrically operated indicator which will be connected to a light and buzzer in the cab identifying to the Operator when pressure filter is clogged. The filter must meet or exceed the ISO cleanliness standards of 17/15/12. Model number shall be a Parker model 30P210 or Internormen HP17125VG or prior approved equal before bid opening.

WARRANTY

Three (3) year standard warranty on complete hydraulic and control system.

MICRO PROCESSOR SPREADER/LIQUID CONTROL

The electronic spreader control shall be designed for precise, closed-loop control of granular and pre-wet liquid application as standard and shall have the ability to control direct application liquid when optional equipment is selected. The electronic spreader control shall have a **field replaceable** battery back up that protects memory functions. Data memory shall be 512K RAM. For data logging unit shall retain a minimum of four thousand (4000) events. The electronic spreader firmware shall be upgradeable by downloading files from the supplier's web site at no charge to the municipality for the life. The unit must be protected from reverse polarity, as well as be over-voltage protected by using a five-amp reset circuit breaker. All circuit boards to be conformal coated. The spreader control is to be capable of self-diagnostics for system errors and correction procedures. Error codes shall be displayed in plain English, coded messages that require an additional document to interpreted are not acceptable.

As standard, the control unit shall have password protection to prevent unauthorized use of set up function. As an option, Button technology shall be available for saving and loading of calibration parameters. The control unit shall be capable of self-calibration of auger/conveyor feed rates and require no additional timepieces to calibrate. Programming shall allow for blast function to be set one of three ways: momentary, timed or by distance traveled. The unit must also be capable of spreading up to **four** different granular materials and ten programmable spread rates. Controller shall have programmable nomenclatures for granular and pre-wet materials. Programming shall provide for automatic default to open loop in the event of a feedback failure. The unit must provide three operational modes: manual, open loop (ground speed only) and closed loop (ground speed with auger/conveyor feedback). Programming shall also provide for two-speed axle input as required.

Text display that shall consist of a two line alphanumeric fluorescent display shall inform the operator of spread rate information (US or metric) and calibration parameters. The unit must be capable of displaying logged spread run information for intermediate reference and be able to download data to a serial printer or PC computer when complete data is required. The unit will provide real time and date. The unit must provide for three compensated valve outputs. In addition the unit shall have a bi-directional RS232 port for printer or data collection. Unit shall have a standby (pass)

and blast feature as standard. Unit shall provide stationary unload functions on granular, pre-wet and direct functions. The unit shall also be upgraded for event logging. The control shall have a programmable jump-start feature to provide immediate material flow at start up. The unit must be programmable to interface with road temperature sensors, direct liquid application systems, and AVL/data management equipment. Each unit shall come with Supervisor key to provide access to calibration parameters without access code. There shall also be one Driver key supplied with each unit. The control unit shall be capable of utilizing a CAL key for ease of programming the spreader control calibration factors. Salter control shall be a Force America SSC-5100 or prior approved equal.

EXHIBIT B
COMMANDALL CONTROL SYSTEM

The main control console shall control all hydraulic and auxiliary lighting functions, including the closed loop granular control, granular pre-wetting, and liquid anti-icing options. The control center shall be an ergonomically designed armrest type with all control functions at the driver's fingertips. There shall be a joystick control that includes a fully proportional hoist control with center interlock and dual axis thumb controls for plow and wing functions as needed. The stick will also include two push button switches for spreader/liquid standby and blast. Two solid-state warning lights illuminated in red and buzzers for low oil and hot oil must be supplied. Warning lights and buzzers for body up and filter bypass will also be available. Control center shall have separate, easy to service cable connections for feedback sensors, speedometer signal, main power, and valve outputs. There shall also be 8 switches with individual circuit breakers available for auxiliary lighting or other electrical functions. An additional 5-switch panel will be used as needed for boom switches on multi-lane deice systems and spare switch functions. The electronic spreader control shall be designed for precise, closed loop control of granular material application, liquid pre-wetting of granular material, and liquid anti-icing spray system. The spreader system alphanumeric fluorescent display shall be remote mountable with LED indicators for power, blast, spreading, liquid, and direct application. The electronic spreader control shall have internal battery back-up to protect memory functions and be protected form reverse polarity as well as over voltage. The spreader control to be capable of self diagnostics for system errors and correction procedures. Error messages will be in text form. The control unit must have password protection to prevent unauthorized access to set up and calibration parameters. Digital keys will be provided for mechanics and/or supervisors to access calibration parameters in the event the password is lost or forgotten. Programming shall allow for blast function to be set one of three ways; momentary, timed, or by distance traveled. Unit must be capable of spreading up to two alternate granular materials at various gate settings. Programming shall provide for automatic switching to open loop mode in event of conveyor feedback failure. Manual mode for granular & deice can be activated if needed. Closed loop auger feedback signal shall be from mechanical sensor built into the motor used on the conveyor drive on the v-box spreader. Closed loop liquid feedback shall be by means of digital signal flow meters to maintain precise liquid control. Programming shall also provide for two-speed axle input as required. Text display shall inform the operator of spread rate information and calibration parameters. The unit must be capable of displaying logged spread run information for immediate reference and be able to download data to a serial printer, GIS/AVL system, or personal computer when complete data is required. The unit will provide real time and date. The unit must provide for programmable PWM out-put frequency. In addition, the unit must provide for stationary unload, skip mode, and a programmable jump-start to provide immediate material flow at start up. Other optional features available as needed include closed-loop spinner, road temp measurement, material output compensation based on road temp, and dual boom with up to three lanes for deice applications. The control center with electronic closed loop material control shall be a Force America Commandall 5100 system.

EXHIBIT C
REXROTH A10V0100 SPECIFICATION

The hydraulic pump will be a cast iron, variable displacement piston pump with load sensing compensator. To insure system compatibility the pump and valve must be made by the same manufacturer. The pump will feature an internal bleed down compensator and side facing SAE flange type porting. Pump size to be a minimum of 6.0 cubic inches/revolution (100cc/revolution) Pump to be a Rexroth A10V0100 part number BH00979162 with 1 ½" keyed shaft (no substitute, standardization. Pump to be supplied as LH rotation for crankshaft drive.

Spreader Control

It is the intent of this specification to describe the minimum requirements for a microprocessor based closed loop ground speed spreader control system. The controller will provide for accurate spreading of granular, pre-wet liquid and direct liquid such as anti-icing materials. The controller will have expansion capability to accommodate a second liquid function that will provide simultaneous operation of two liquid systems if desired as well as granular. The controller will have a panel switch to activate the liquid function(s). This switch will enable the liquid system determined in the operating mode. There will be up to three operating modes to select with the single liquid systems and four modes with the dual liquid systems. The ability of the operator to select granular only, liquid only, granular and pre-wet, and a combination of granular, pre-wet and anti-icing with be available in the operating mode depending on equipment selected. All granular and liquid systems will stop when the vehicle stops. Upon vehicle movement all systems active will resume dispensing. The controller must be capable of operating most current pulse width modulated valves. Valve electrical characteristics shall be adjustable in the programming mode to allow for monitoring of the valve circuit.

The controller will be backlit and have a large dot matrix graphic LCD display. The display will show the current material type being spread, miles per hour and the desired application rate. The display will also show either miles traveled and pounds delivered or day, date and time. The display will also show your liquid rate in gallons per ton of granular, gallons per mile, and total gallons. The control will have the ability to adjust automatically for gate height changes if selected in equipment and eliminate the need for re-calibration of the vehicle if gate height is changed. The display will show the operator via a graphic icon gate height changes and gate opening in inches. The controller will have the ability to accommodate a spinner sensor for closed loop spinner. The number of lanes being spread during closed loop spinner will be shown graphically in the operating mode. The granular rates will automatically be adjusted to maintain the desired rate selected by the operator eliminating the need to manually increase the rate if the number of lanes spread is changed. All the above will be visible during normal operation. The display shall also alert the operator to any errors in the input signals detected by the microprocessor self diagnostic system. The use of numeric error codes is not acceptable.

The controller will have "on-screen" menu based programming using the panel controls for setup and calibration. Access to setup and calibration will be gained by use of a single key switch. The need for additional inputs or screens for setup and calibration is unacceptable. The controller will be capable of both automatic and manual modes. The ability to lock out manual mode will be available in the programming mode. The use of de-tented lane width and spread rate switches is not acceptable. A covered communication port will be located on the front panel. The communication port will be of RS232 standard and provide real time data used for AVL/GPS integration, Data Guard software communication and printing equipment. Information such as truck ID, recent and annual information including: pounds total, miles total, pounds per mile average, gallons of liquid material, miles traveled with liquid on, percent miles in auto mode, average mile per hour and maximum miles per hour. Other stored calibration information will be available such as all equipment settings, all calibration settings, and all material information as well as equipment options information.

The controller will provide for four Material types. Information such as material name, blast duration, blast will follow and maximum application rate, % of liquid to granular output, will be stored with each material type.

The controller will have the ability to operate in either open loop or closed loop feeder operation. The feeder will stop when the vehicle stops. Upon vehicle movement the feeder will start to spread automatically and will incorporate and adjustable valve trim "start percentage" to assist in performance with low-resolution speedometer signals. In the event of a feeder sensor failure, the control will revert to open loop operation. This will be done from the operation mode by activating the blast button and will not require the programming access key. This will allow for temporary open loop ground speed control until the feeder (auger) sensor circuit is corrected.

The controller will be mounted in a way to provide the best operator usability and safe vehicle operation. All sensors

and cables will be provided to make the system complete and usable.

Component Technology Storm-guard Model GL-400 is acceptable.

Multi-Guard Specification

The intent of this specification is to describe a fully proportional, 2-stick control console that is modular in construction for different cab mounting configurations.

Control System

The hoist shall be controlled by a single axis proportional control with a safety or "dead-man" switch integrated in the control. The plow functions shall be controlled by a dual axis, proportional joystick (a single control for all functions is optional) with an on/off switch integrated in the plow stick for optional remote blast or pass. The front bay shall be modular for expansion to a third electronic joystick control for additional hydraulic functions such as wing plow or underbody scraper. Controls shall have integrated float circuit(s) for plow, blade and wings by either auxiliary input from proximity, pressure or timing logic. The control console will be mounted between the seats on a Circuit Guard pedestal with height and swivel adjustments to provide easy operation for the driver.

Accessory Switch Controls

The switch bays shall be compatible with either standard rocker switches or the Touch Guard switch system. The console may be configured with both types of switches depending on the configuration desired. If the Touch Guard switch system is chosen, switches shall be field programmable with dipswitches to allow selection from momentary to on/off. The switch legends shall also be easily replace and changed in the field. The switches, when specified Touch Guard, shall have visible green LED backlighting when in the off position and changed to red LED when depressed by the operator. The switch pads should be easily serviceable by a detachable cable and four mounting screws for field replacement. There shall be integral connections with the accessory switch circuits to the logic control center to allow for self-diagnostic system monitoring. Upon any switch circuit failure, the switch console shall have an audible alarm and with flashing red LED's. Depressing the switch to the off position shall disable the switch function. The console shall allow for integration with the Touch Guard switch control system or standard Sprague rocker switches and indicators.
Control shall have room for up to 12 auxiliary switch functions that control 15A relays protected with automatic or manual reset breakers with expandable option for additional 6 switches in the armrest control located in front of the joystick (position "A" on print). If the standard rocker switch system is chosen, a total of nine positions for switches or lights shall be available.

Circuit Guard Power Distribution System

The power distribution system shall have field replaceable-socketed relays and fuses. Base unit shall come with Circuit Guard. Unit shall come with integrated circuit panel, automatic reset breakers, color-coded wiring, and plug style connectors. The board shall have optional pin-outs for customer accessories such as two-way radio, etc. The power distribution system shall have isolated grounds and main ground terminal. Ground traces through the board mounting screws are not acceptable.
Multi-Guard system to accommodate GL400 spreader control and be integral to the wiring circuit.
Storm Guard Control System Model SG7 Multi Guard is acceptable.

"TPE" Wiring Specification

Wiring and harness system should meet ISO rating IP68 and NEMA 6. The connectors should be zinc die cast E-coated, similar to a MIL spec connector. Each should have three sealing points- the lock ring itself, a raised portion of the molded plastic around each pin, and a viton O-ring that seals the whole connector. The cable jacket should be TPE-thermoplastic elastomer, and molded to the connectors. Connectors and harness should be rated and tested for a temperature range from – 30C to + 70C. Connectors should be tested to be water tight when submerged in 6' of water for 24 hours, in 275' of water for 1 hour, and when subjected to a 1000-psi pressure wash. The connectors should be designed to have NO corrosion after 5000 hours in a 35C salt spray. Cabling should be rated excellent in low temperature flexibility and in its resistance to oxidation, heat, oil, weather, sun, ozone, abrasion, electrical priorities,

flame, water, acid, alkali, gasoline, benzol, toluol, degreaser solvents, alcohol, and weld slag.

PLOW BALANCE VALVE

System to be supplied with a plow balance valve. Valve to be designed to offset a specific (adjustable) plow weight when activated. Valve to be of cartridge and manifold design, and electrically activated. In the case of a load sense hydraulic system, the valve shall be activated by a single solenoid. In the case of an open center system, the valve is to be activated by two solenoids- one for the plow offset and one for an integral un-loader.

The plow balance system must not alter the operation of any other hydraulic function on the vehicle or have an adverse effect on the performance of other hydraulically operated equipment including wing plow, body hoist, plow hoist or angle, or spreader functions. All normal operations of the plow-lift/lower function must be maintained without additional tasks. Operation of any electrical switches beyond the normal up/down command to raise or lower the plow is not acceptable.

The plow balance system will remain electrically activated when lifting the plow from the road surface. Plow lift must be immediate. It is not necessary to turn off the system for plow lift. Plow lowering and return to balance mode must be done by activating the plow lever or switch to the lower mode.

The plow balance system must be able to hold the plow in the up position indefinitely.

The plow balance manifold shall be of cartridge style valving utilizing “floating” style cartridge valves. The valve body must be constructed of aluminum and have minimum construction hole plugs. All solenoid valve coils shall have manual override capabilities. Manifold must include a pressure test point for use when checking balance pressures. The pressure test point must be capable of taping into the system at pressures of up to 5000 PSI.

EXHIBIT D
PARKER IQAN HYDRAULIC SYSTEM

PUMP Hydraulic pump shall be axial piston pressure and flow compensated load sensing type. Parker model PAVC 65LA12 or equal.

VALVE Specifications Hydraulic Load Sense Valve Assembly

The valve design will be Post Compensated and incorporate Overdemand Management Technology ™ to maintain proportional flow to all functions during pump saturation (Low Pump RPM).
Maximum pressure to 4000 psi and Tank pressures to 300 psi
Maximum flows to 45 gpm.
All functions will be controlled via Proportional Solenoids with PWM @ 100 Hertz and The following flow rates @ 250 psid.
Plow Lift @ 0-16 gpm
Plow Angle @ 0-16gpm
Hoist @0- 45 gpm
Augar / Conveyor @0- 16 gpm
Spinner @0- 8 gpm
Integral Relief Valve set 300 psi higher than pump compensator.
Integral Load Sense Relief set 300 psi lower than pump compensator.
Valve Porting
Inlet SAE 16
Outlet SAE 20
Work Sections SAE 12
Gauge and Load Sense SAE 6

DFE20 Walvoil electronic diversion valve for operation of pup trailer
3 Year Manufactures Warranty

VALVE ENCLOSURE

Control valve to be mounted in weatherproof but not airtight enclosure, made of 10 ga.
Steel with detachable cover. Cover shall be weather sealed around the entire perimeter and held in position by 3 heavy toggle or rubber latches on each side. Cover to have lifting handles with flange covering top and bottom edges. Cover shall be removable with bed in the down position. Enclosure to be painted using powder coat process.

IQAN FULL ELECTRONIC VARIABLE CONTROLS

Specification for IQAN Controller:

The intent of this specification is to describe a Digital Controller which is capable of providing precise ground speed control for Augar / Conveyor, Spinner and Liquid in Open Loop or Closed Loop Control. The following will detail those specifications:

XT2 Control Module

Voltage Supply 9 – 34 VDC
Operating Temperature , minus 40 degrees F to 158 degrees F
Membrane to prevent Condensation inside Controller Module
Tested and Certified by SAE for the following:
EMI per ISO11452-2, ISO14982, ISO11452-4, ISO7637-2
ESD per EN 61000-4-2
MECHANICAL per IEC 68-2-64, IEC 68-2-27, IEC 68-2-29

CLIMATE per IEC 68-2-18, IEC 68-2-30, IEC 68-2-3, IEC 68-2-2, IEC 68-2-1, and IEC 68-2-14
CHEMICAL per IEC 68-2-52
Communicate with MDM Display Module via Can Bus J1939 Protocol and Diesel Engine if required.
Current Command 20ma – 1800 ma, Temperature Compensated
- Dither Frequency adjustable 25 – 150 Hz, Dither Amplitude 0 – 500 ma

Adjustable Ramps (0 – 5 seconds)
Fine Control Adjustment for Precise Linear Output
Minimum and Maximum Output Controls
Minimum for Dead Band Eliminator
Maximum for Limiting Material Output
Independent Min / Max for Auto and Min / Max for Manual (4 total)
Set by LCD Readout on MDM Display Unit
Command Signal from Transmission shall be in Voltage (0 to + 5 volts) or
(0 to + 10 volts) and Pulse is optional
Fault Warning displayed on MDM Display Unit for Loss of:
Communication between XT2 and MDM
Command Signal from Transmission
Feedback from Spinner or Augar (Closed Loop) if required
Start-up Errors
Software Errors
Program and Diagnostic Manuals for Software

MDM Display Module with Integral Enclosure

Displays the following information to driver.
Date and Time
Granular Rate and Spinner Rate
Liquid Rate and Spinner Rate
MPH
Self diagnostics for voltage and current between XCP control module, MDM display module, XT2 valve driver and coils on hydraulic valve assembly
Menu promptings for calibration procedures

Communicate with XT2 Control Module via Can Bus J1939 Protocol
RS232 Port for PC or Palm Hand Held Device for Communication with Windows based IQAN Development Software for Custom Programming, Password Protected
Holds up to 4 different programs for Product Requirement. Selectable via LCD Display (Salt, Anti Skid, etc),
Microprocessor based " Flash Memory " for program storage
Tested and Approved by SAE for the following:
Electrical Disturbance ISO/DP 7637-2-3
Radiated Susceptibility ENV 50140, ENV 50204
Radiated Emissions EN 55022
Conducted Susceptibility EN 61000-4-6
Electrostatic Discharge EN 61000-4-2
Vibration Random IEC 68-2-64 Fh
Vibration Shock IEC 68-2-27 Fh
Vibration Bump IEC 68-2-29 Eb
High Temperature IEC 68-2-2 Bb
Temperature Cyclic IEC 68-2-14 Nb
Low Temperature IEC 68-2-1 Ab
Damp Heat, Cyclic IEC 68-2-30 Db var. 1
Damp Heat, Steady State IEC 68-2-3 Ca
Salt Mist, Cyclic IEC 68-2-52 Kb
Water IEC 68-2-18 Rb3
Back-Lit graphic LCD Display, Resolution @ 202 x 32 pixels
9 – 32 Volt Power Supply, with LED indicator light
Inputs and Outputs are protected against short circuit to ground, main power supply, and reversed polarity
Real Time Clock

XCP CONTROL MODULE

Power On/Off Touch Tek Switch

Auto/Manual Touch Tek Switch

Hoist Enable Touch Tek Switch

Blast Touch Tek Switch

Pass Touch Tek Switch

Touch Tek switches will backlight red when turned on and backlight green when Turned off.

Three separate Non detented potentiometers for Auger/Conveyor, Spinner, and Liquid Control.

Three separate LST proportional levers for Hoist, plow angle, and plow raise.
A separate switch will activate the diversion valve for operation of pup trailer with the Hoist LST lever.

All Touch Tek Switches, Potentiometer and Proportional Levers will be properly labeled and back-lighted. Maximum light intensity can be limited with automatic dimmer control for night time operation.

WIRING HARNESS

Wiring harness shall be one assembly with heavy braided cover for protection of internal wiring against or from the elements.

FILTRATION

Model 40 CN210QP25N4N41 high pressure filter. Beta Ratio=200 for 10 micron or 99.7% efficient. Delta P of 7.5 psi @ 50 GPM. 30 grams of dirt capacity @ 5psi
SAE24 inline ports. ¼ inch port for pressure transducer

INCONTROL 12 CONTROL MODULE

Incontrol 12 has a twelve(key)-keypad with dual color back light which allows the user to turn on and off each device. Each key controls a relay, which in turn applies power to the device. Operates on standard 12 VDC automotive power. Each output relay is individually fused and can control up to 30 amps with a maximum total unit power of 200 amps. Fully sealed keypad with interchangeable key legends. Diagnostic LED's on each relay board showing actual output state. Each output can be configured for momentary or latching control. Ignition signal input to insure that the unit only operates when the vehicle ignition is on.

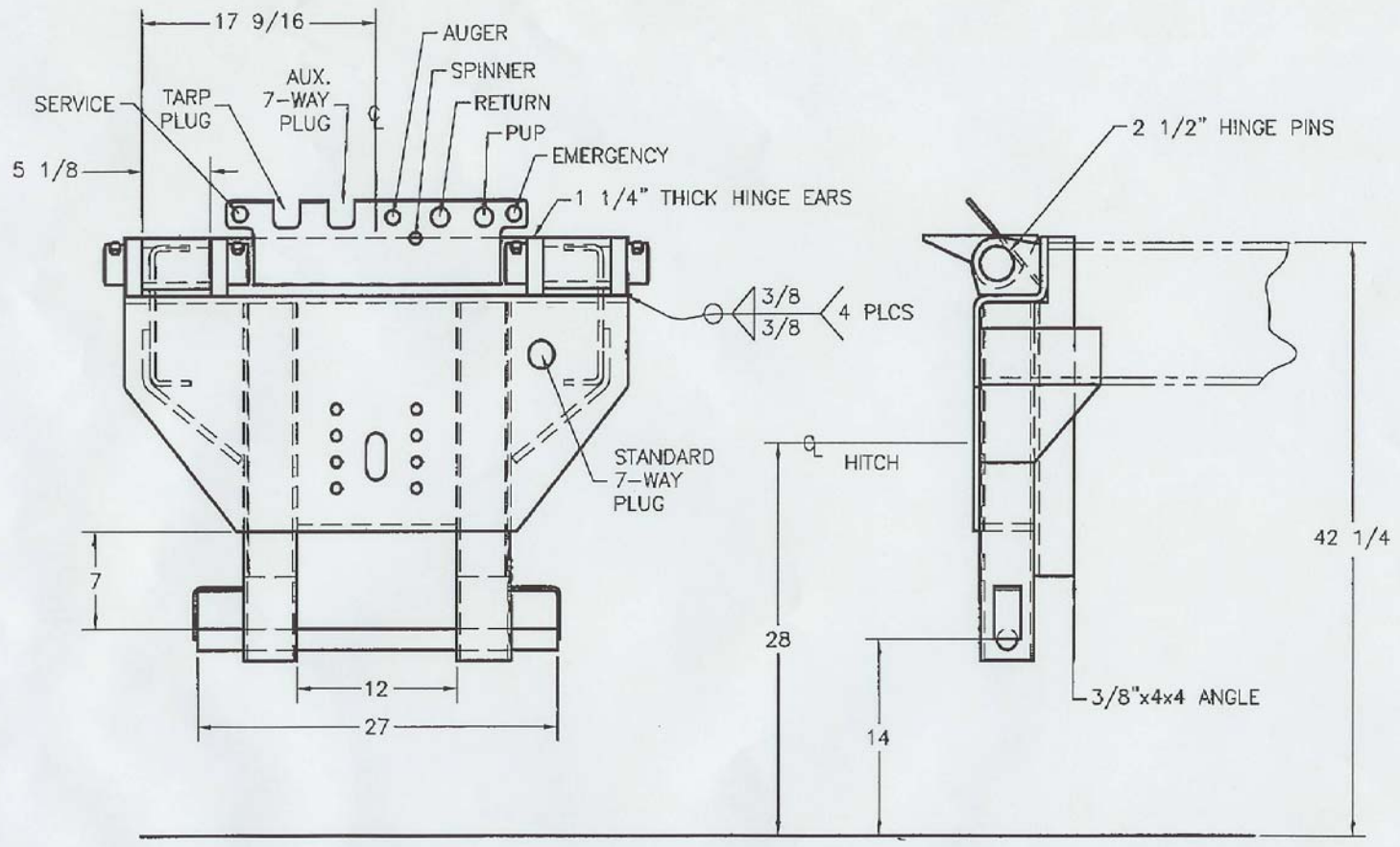

UDOT REFERENCE DRAWING

TESCO WILLIAMSEN

1925 West Indiana Ave.
Salt lake City, UT
June 22, 2005

Specifications for UDOT bid GL 5074

Longitudinal design, crossmemberless.

Dimensions:

Length 14'
Width 84" inside x 96" wide outside.
Side height 44"
Tailgate height 44"

CONSTRUCTION:

Front End
62" high, 10 ga. 304 Stainless steel construction with a fully enclosed top rail, integral tarp housing and two formed intermediate horizontal stiffeners.

Cylinder Housing
Hydraulic cylinder to be mounted out front of the body (no protrusion into the load area). Vertical lift assembly for the cylinder mount to be10 ga. 304 stainless steel. To extend upward from the longitudinales to the top of the headboard and to be attached as to provide support to the front end, open to the front.

Sides
44" high, exterior construction to be one-piece design, 10 ga. 304 stainless steel. With a 3" x 5" double sloping boxed top rail, one integrally formed horizontal side stiffener, 8" high x 6" deep sloping bottom rail and lapped under the floor with a fully welded seam. No exterior horizontal welded seams. The interior of the sides to be one piece, 1/8" A570 steel with 50,000 lb. yield and 65,000 lb. tensile strength. Fully welded perimeter.

Corner Posts:
44" high rear corner posts 6" wide with recess for upper tailgate hinges, 10 ga. 304 stainless steel exterior (front, side and back). Inside (rear) of corner post 1/8" 450 BHN 175,000 psi yield and 200,000 psi tensile strength steel. Two keyhole tailgate chain catches in each corner post with ¼" stainless steel interior backing plate.

BID GL5074 DETAILED SPECIFICATIONS CONT.

Tailgate
44" high, sloping forward 18 degrees. Double wall design, interior face 1/8" 450 BHN 175,000 psi yield and 200,000 psi tensile strength steel and the exterior 10 ga. 304 Stainless steel. The exterior panel will have formed into it a top, bottom and two intermediate, sloping, horizontal braces, no exterior horizontal welded seams. Vertical end braces shall be 3" x 3" x 1/4" square stainless steel tubing capped on both ends. Steel upper hinges are to be recessed into the upper corner posts, and not to extend above the top of the corner post. The hinges shall be ¾" flame cut hi-tensile steel with 1-1/4" hinge pins thru greaseless bushings. Pins to be quick release type with spring detented locking pins. Lower cross shaft 1-1/4" solid steel. Independently adjustable, 5/8" flame cut hi-tensile steel overlock hardware and cradle (cast not acceptable) with ¼" backing plate on the back of the corner post. Tailgate locked by over center hardware at the rear of the body with spring type air cylinder (air to open, spring to close, over center to lock). Heavy-duty "D" ring centered at the top in the interior. 3/8" Combination drop and spreader chains with protective covers (shipped loose). Gate and body to be stamped with matching numbers on upper right at rear corner and at least 3/8" high. Body and matching tailgate to be delivered together.

Floor
1/4" thick, 400 BHN 180/220,000 PSI steel, with radius side formed floor to side. One piece (no seams),

Understructure
Longitudinal design, (crossmemberless) for a smooth understructure. 10" high x 4" wide x 1/4" wall 50,000 PSI yield steel rectangle tubing fully welded to the floor. Rubber cushion strips 3/8" thick, vulcanized, and attached to the bottom of the steel tubing. Full depth sloping (asphalt) rear crossmember ¼" 304 Stainless steel with reinforced cutout for direct access to the connectors on the rear hinge assembly.

Lights
1 set LED 4" diameter, combination stop, turn and taillights recessed in the rear corner posts. 4" diameter backup lights, recessed into the rear corner posts. LED 2-1/2" diameter rear clearance lights mounted as high as possible in top of the corner post. And LED 2-1/2" diameter recessed side marker lights. LED 2-1/2" diameter ICC cluster in mounting bracket and attached to the rear hinge assembly. All lights mounted in rubber grommets. License plate light and plate mounting posts on buck plate. Side and rear reflectors to be 3M/PM490 stick on type.

BID GL5074 DETAILED SPECIFICATIONS CONT.

Steps
One driver side front corner on the outside rail, 10" long galvanized grip-strut with 24" long stainless steel grab handle on the cab protector outside vertical gusset, attached with stainless steel fasteners.

Cab Protector
20" long x 84" wide at the front of the body tapering inward to 67" wide at the front. Installed to clear exhaust system. Shelf out front of the cab protector 48" wide x 11" long. 10 ga. 304 stainless steel for customer furnished light bar.

Construction Specifications
All stainless steel shall be 304 with #2B finish
Welding stainless to stainless

- Mig 308 LSI, ER 308SI / ER 308LSI

Welding stainless to 450 BHN steel

- Mig 309LSI / ER 309SI / ER 309LSI
- FCP S309/309L ER309 / ER 309L

Welding 450 BHN steel to A570 steel

- Outer shield 71M E71T-9 E71T-1

HOIST:

Configuration
Single cylinder base lift trunnion mount, out front of the body. 30-ton capacity.

Cylinder
5" diameter 1st moving stage, 3 stage, 130" stroke

Cylinder Attachment
The bottom cylinder pin is a 2" diameter cold rolled steel shaft that pivots on two 1" flame cut pin bearings; the pin is held in place by two 3/8" bolts. The bearings are welded to a 5" x 5" x ½" square tubing crossmember that is welded to 3" x 5" x 1/2" angles that are over the top and down the outside of the truck frame. The angles are bolted to the truck frame by either two 5/8" grade 8 or three ½" grade 8 bolts. The bolts shall have grade 8 flat washers on both sides and a grade 8 lock nut (nylon lock not acceptable). The threads are to be to the outside and torqued to 90 ft. lbs. for ½" or 185 ft. lbs. for 5/8".

BID GL5074 DETAILED SPECIFICATIONS CONT.

The cylinder attaches to the body through a cover sleeve. This circular steel outer covering is secured to the top of the cylinder by a single 1-1/2" threaded stud. The lower attachment is by two "lift straps" that are bolted to the body longitudinales with six 5/8" grade 8 bolts each side and tightened as per the procedure noted above. Lift strap pivot points utilize greaseless phoenlic bushings.

Body Guides
Truck frame mounted at the forward third of the body. The guides will be 3/8" thick x 5" wide and attached to the truck frame by three ½" grade 8 bolts.

Safety Prop
A tubular safety prop constructed of 2-1/4" pipe. The pivot end of the prop shall be welded to the outside of the driver side longitudinal and to pivot down ward. into a prop pocket. The pipe is held in the stowed position by a spring-loaded catch

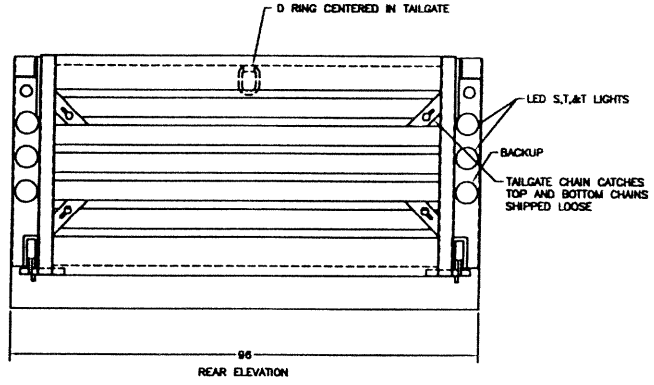

REAR ELEVATION

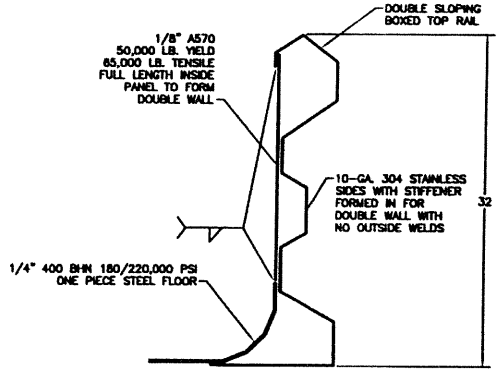

TYP SIDE SECTION

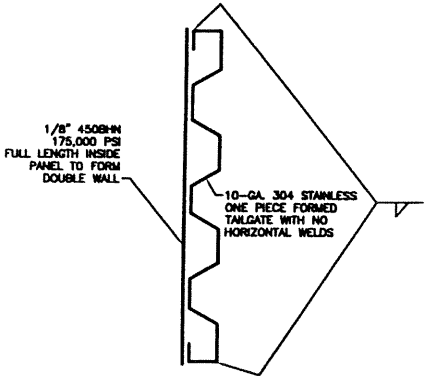

TYP TAILGATE SECTION

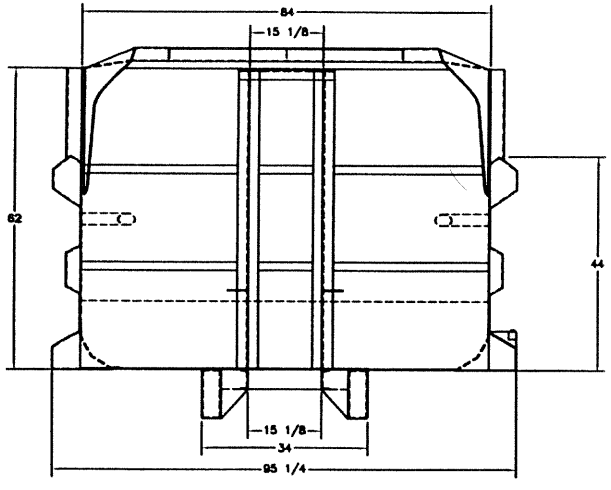

FRONT ELEVATION

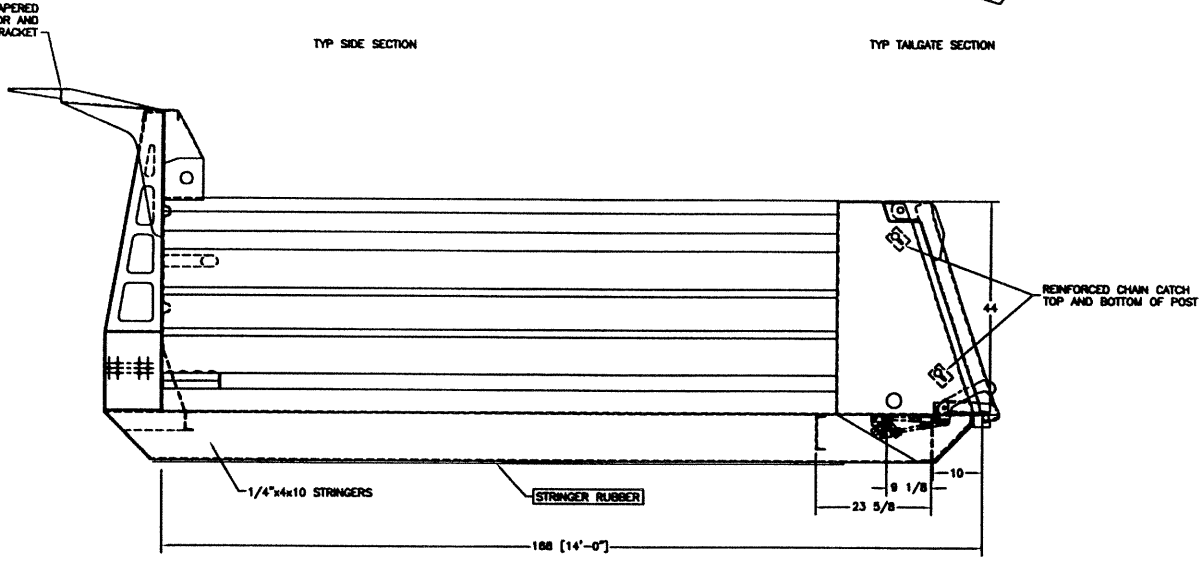

THIS DRAWING CONTAINS PROPRIETARY INFORMATION WHICH IS SUBMITTED IN CONFIDENCE, AND SHALL NOT BE USED OR DISCLOSED WITHOUT THE WRITTEN CONSENT OF WILLIAMSEN MFG.

WILLIAMSEN SUBSIDIARY OF TESCO AMERICAN

WNS14-44 STAINLESS
STATE OF UTAH

08637	STOFUTSTAINLESS
1=1'-0"	D-UNSWORTH 1